FORMULATION OF OPTIMIZATION PROBLEM

Presented by:

Prof Ir Dr. Haslenda Hashim
Process Systems Engineering Centre (PROSPECT)
School of Chemical & Energy Engineering
Universiti Teknologi Malaysia

Learning outcomes

- Able to understand the definition of objective function, decision variable, parameter, constraints
- Able to differentiate different type of optimisation problem (LP, IP, MILP, MINLP etc)
- Able to formulate the optimisation problem
- Understand the application of graphical method in solving the LP problem

THE ESSENTIAL FEATURES OF OPTIMIZATION PROBLEM

objective function to be minimised (or maximised)

$$\min_{x_i} f(x_i)$$

vector of decision variables to be chosen to find the min. of f(x)

equality constraints

$$s.t.$$

$$h_j(x_i) = 0 \qquad j = 1, 2, \ldots j$$

in-equality constraints

$$g_k(x_i) \geq 0 \qquad k = 1, 2, \ldots k$$

$$i = 1, 2, \ldots i$$

i, j, k are the # of decision variables and constraints

DEFINITIONS AND JARGON

Objective function

- that function that you which to minimise or maximise, usually an economic value eg. maximize profit, production rate, throughput, minimize energy utilisation, cost

Decision variables (item that you want to be determined)

- those variables that you can adjust or chose in order to minimize or maximize the objective function
- variables can be:
  - real eg. flow rates, concentration, temperature, pressure
  - integers eg. # of trays
  - binary eg. Select/not select - plant process flowsheet

Constraints

- limitations on the free adjustment of decision variables. They can be physical, economic, policy, or environmental
- constraints can be explicitly defined in terms of the decision variables eg. flow rate > 0 or implicitly defined in terms of other variables eg. product concentration > 95%

CLASIFICATION OF OPTIMIZATION PROBLEM (1/3)

Linear Programs (LP's)

- A mathematical program is **linear** if

- $f(x_1,x_2,\ldots\ldots,x_N)$ and $g_i(x_1,x_2,\ldots\ldots,x_N)\leq 0$ are **linear** in each of their arguments:

- $f(x_1,x_2,\ldots\ldots,x_N) = c_1x_1 + c_2x_2 + \ldots. c_Nx_N$
- $g_i(x_1,x_2,\ldots\ldots,x_N) = a_{i1}x_1 + a_{i2}x_2 + \ldots. a_{iN}x_N$

- where c_i and a_{ij} are known constants.

Linear Programs (LP's) can be solved to yield a **global** optimum. Solver routines **can guarantee** a truly optimal solution.

CLASIFICATION OF OPTIMIZATION MODEL (2/3)

Non-Linear Programs (NLP's)

- A mathematical program is non-linear if any of the arguments are non-linear. For example:

$$\begin{aligned} \min \quad & 3x + 6y^2 \\ \text{s.t.} \quad & 5x + x \cdot y \geq 0 \end{aligned}$$

Non-Linear Programs (NLP's) can be solved to yield a local optimum. Solver routines can not always guarantee a globally optimal solution.

Integer Programming

- Optimization programs in which ALL the variables must assume integer values. The most commonly used integer variables are the zero/one binary integer variables.

- Integer variables are often used as decision variables, e.g. to choose between two reactor types.

CLASIFICATION OF OPTIMIZATION PROBLEM (3/3)

Mixed Integer Linear Programs (MILP's)

- Linear programs in which SOME of the variables are real and other variables are integers

- Can be solved as individual LP's by fixing the integer variables, thus a global optimum can be identified.

Mixed Integer Non-Linear Programs (MINLP's)

- Non-linear programs in which SOME of the variables are real and other variables are integers

- Can be solved as individual NLP's by fixing the integer variables, but depending on the nature of the NLP's it may not be possible to find a global optimum.

GENERAL PROCEDURE TO SOLVE AN OPTIMIZATION PROBLEM

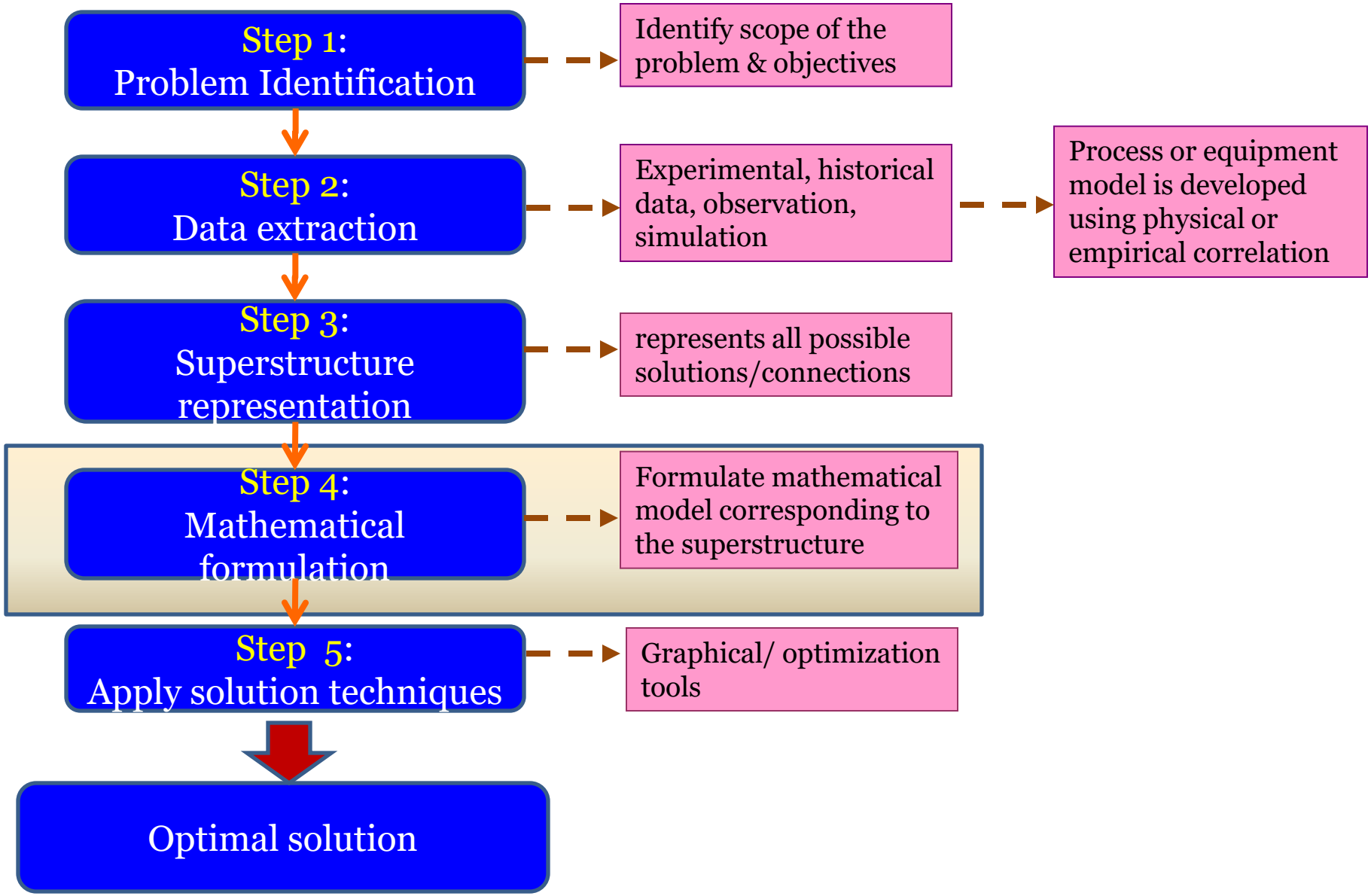

GENERAL PROCEDURE TO FORMULATE AN OPTIMIZATION PROBLEM

STEP 1. DEFINE THE DECISION VARIABLES

STEP 2. DEFINE THE OBJECTIVE FUNCTION

STEP 3. DEVELOP PROCESS OR EQUIPMENT MODEL USING PHYSICAL/EMPIRICAL CORRELATION

- INCLUDE EQUALITY & INEQUALITY CONSTRAINTS

PROBLEM FORMULATION

STEP 4. APPLY SUITABLE SOLUTION TECHNIQUE

e.g graphical method vs optimization tools

STEP 5. PERFORM SENSITIVITY ANALYSIS

PROBLEM SOLVING

EXAMPLE 1

A farmer is preparing to plant a crop and needs to fertilize a field. There are 2 brands of fertilizer to choose from, Super-gro and Crop-quick. Each brands yield a specific amount of nitrogen and phosphate per bag as follows:

	Chemical Contribution	
	Nitrogen (lb/bag)	Phosphate (lb/bag)
Super-gro	2	4
Crop-quick	4	3

The farmer requires at least 16 lb of N2 and 24 lb of phosphate. Super-gro cost RM 6/bag and Crop-quick costs RM 3/bag. The farmer wants to know how many Bags of each brand to purchase in order to minimize the total cost of fertilizing.

SOLUTION EXAMPLE 1

STEP 1: Define the desicion variables

x_1 = bags of Super-gro

x_2 = bags of Crop quick

STEP 2: Define the objective function

min $f(x) = 6x_1 + 3x_2$

STEP 3: Define the equality and inequality constraints

- Equality constraint

  - None except if the farmer said that the phosphate requirement must be exactly 24 pound, the constraint should be written

  $4x_1 + 3x_2 = 24$ (phosphate constraint)

- Inequality constraint

  $2x_1 + 4x_2 \geq 16$ (nitrogen constraint)

  $4x_1 + 3x_2 \geq 24$ (phosphate constraint)

- Nonnegativity constraints – to indicate that negative bags of fertilizer cannot be purchased

  $x_1, x_2 \geq 0$

SOLUTION EXAMPLE 1

The complete optimization formulation for this LP problem

Min $f(x) = 6x_1 + 3x_2$

Subject to

$2x_1 + 4x_2 \geq 16$	**(nitrogen constraint)**
$4x_1 + 3x_2 \geq 24$	**(phosphate constraint)**
$x_1, x_2 \geq 0$	**(nonnegativity constraint)**

SOLUTION EXAMPLE 1: GRAPHICAL SOLUTION

STEP 5: Apply suitable optimization technique

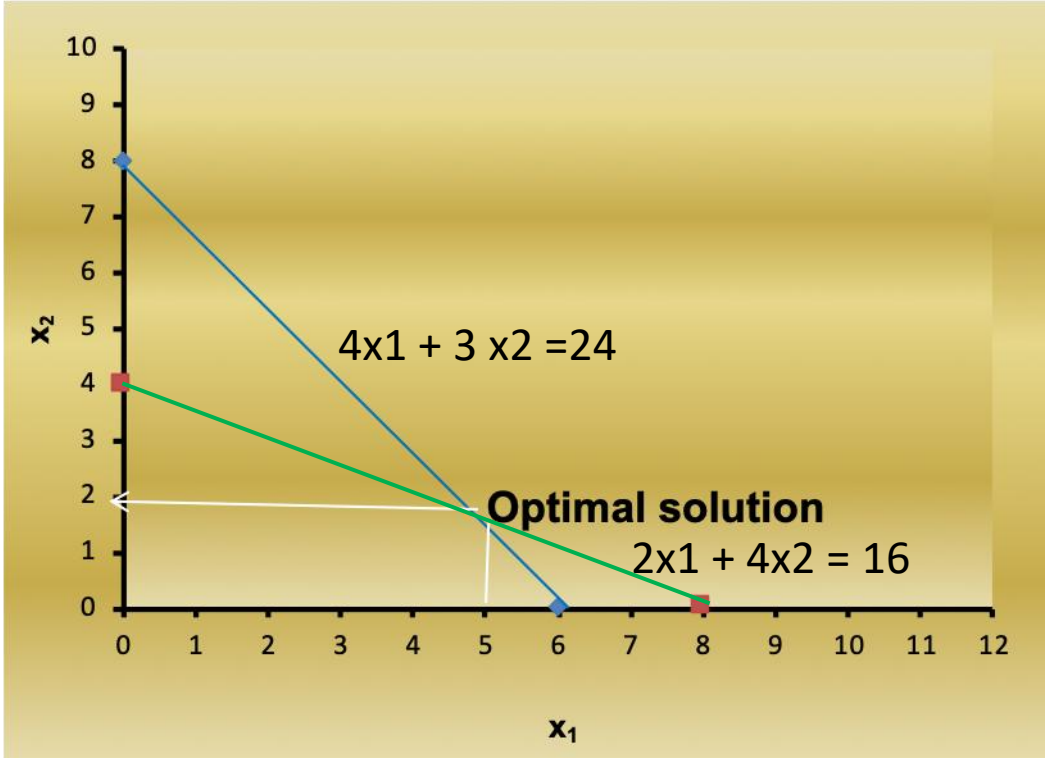

STEP 6: Perform sensitivity analysis e.g. What if the cost of the raw material (e.g. super-grow) is increased by 10%

EXAMPLE 1 (CON'T)

A farmer is preparing to plant a crop and needs to fertilize a field. There are 2 brands of fertilizer to choose from, Super-gro and Crop-quick. Each brands yield a specific amount of nitrogen and phosphate and potassium per bag as follows:

	Chemical Contribution		
	Nitrogen (lb/bag)	Phosphate (lb/bag)	Potassium (lb/bag)
Super-gro	2	4	1.5
Crop-quick	4	3	4

The farmer requires at least 16 lb of N2, 24 lb of phosphate and 18 lb of potassium. Super-gro cost &6/bag and Crop-quick costs $3/bag. The farmer wants to know how many bags of each brand to purchase in order to minimize the total cost of fertilizing.

Utilities Model Libraries Help

zer.gms

```
ilizer cost in dollar per bag

i,j), C(i)*x(i,j));
'N')) =g= 16;
'P')) =g= 24;

1/;

ng mip minimizing cost;
```

Overwrite

EXAMPLE 2

Owing to the recent environmental regulations, the scrubbing of hydrogen sulfide from gaseous emissions is becoming a common industrial practice. One of the efficient solvents is monoethanolamine “MEA”. In the chemical plant, there are two variable grades of MEA. The first grade consists of 80 weight% MEA and 20% weight water. Its cost is 80 cent/kg. The second grade consists of 68 weight% MEA and 32 weight% water. Its Cost is 60 cent/kg. It is desired to mix the two grades so as to obtain an MEA solution that contains no more than 25 weight% water. What is the optimal mixing ratio of the two grades which will minimize the cost of MEA solution (per kg)?

GENERAL PROCEDURE TO SOLVE AN OPTIMIZATION PROBLEM

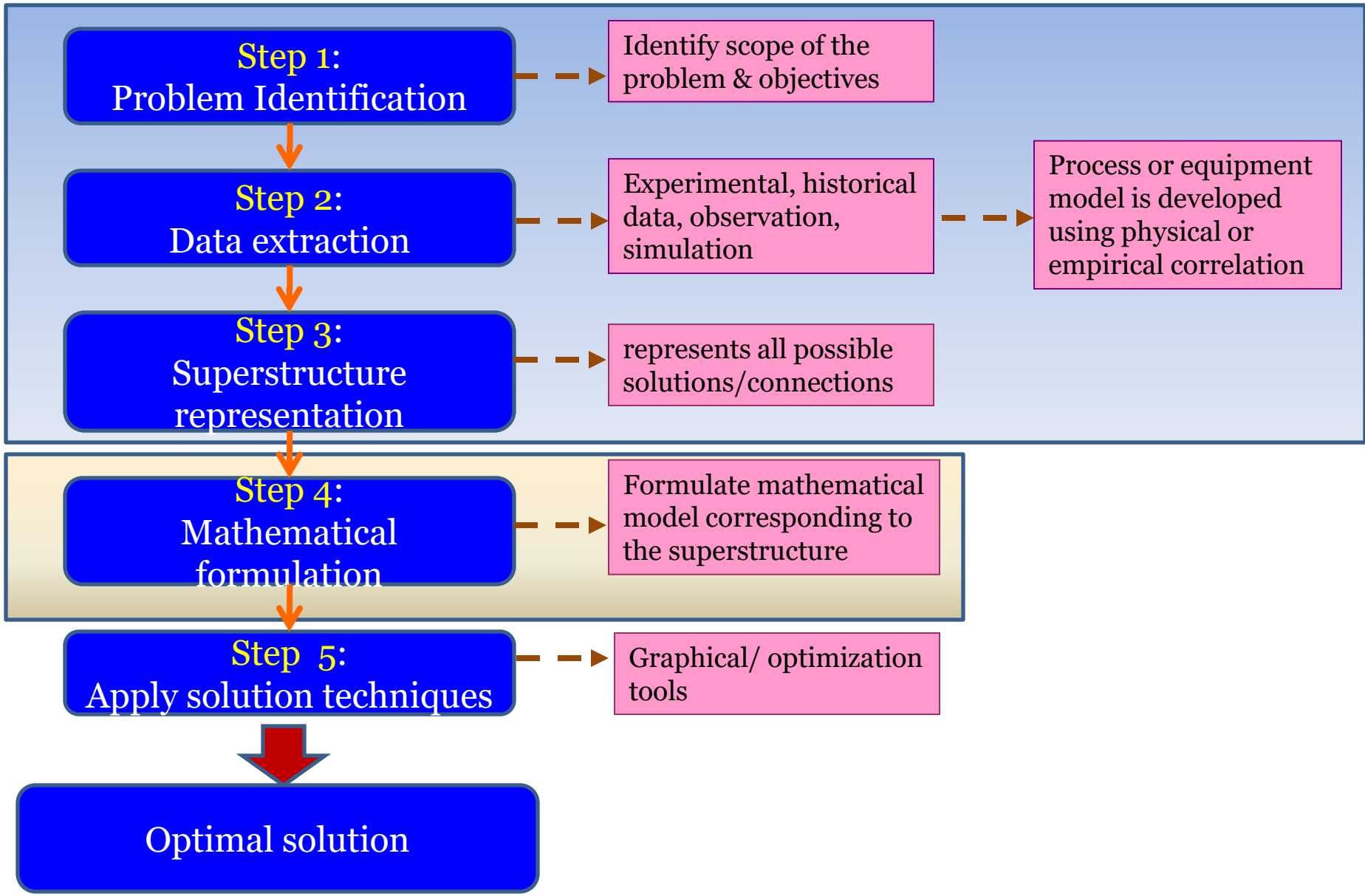

SOLUTION EXAMPLE 2: MODEL FORMULATION

Basis: 1 kg MEA solution

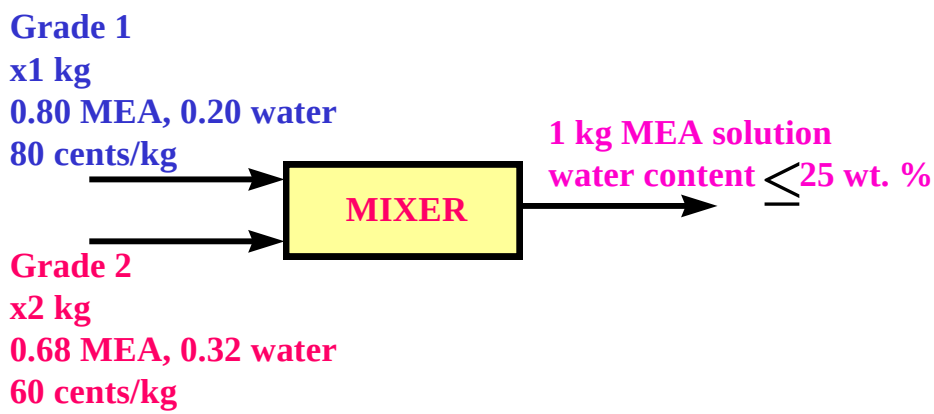

Step 1: Define the decision variables

x1	Amount of grade 1 (kg)
x2	Amount of grade 2 (kg)
z	Cost of 1 kg solution (cents)

Step 2: Define the objective function

$$\min z = 80 \cdot x1 + 60 \cdot x2$$

Step 3: Define the equality and inequality constraints

$0.20 \cdot x1 + 0.32 \cdot x2 \leq 0.25$	Water content limitation
$x1 + x2 = 1$	Overall material balance
$x1, x2 \geq 0$	Non-negativity

SOLUTION EXAMPLE 2: GRAPHICAL SOLUTION

Step 4: Choose the best solution technique

- The set of points (x1, x2) satisfying all the constraints, including the non-negativity conditions.
- Constraint on water content $0.20 \cdot x1 + 0.32 \cdot x2 \leq 0.25$
- Non-negativity constraints $x1 \geq 0$, $x2 \geq 0$
- Mass balance constraint $x1 + x2 = 1$

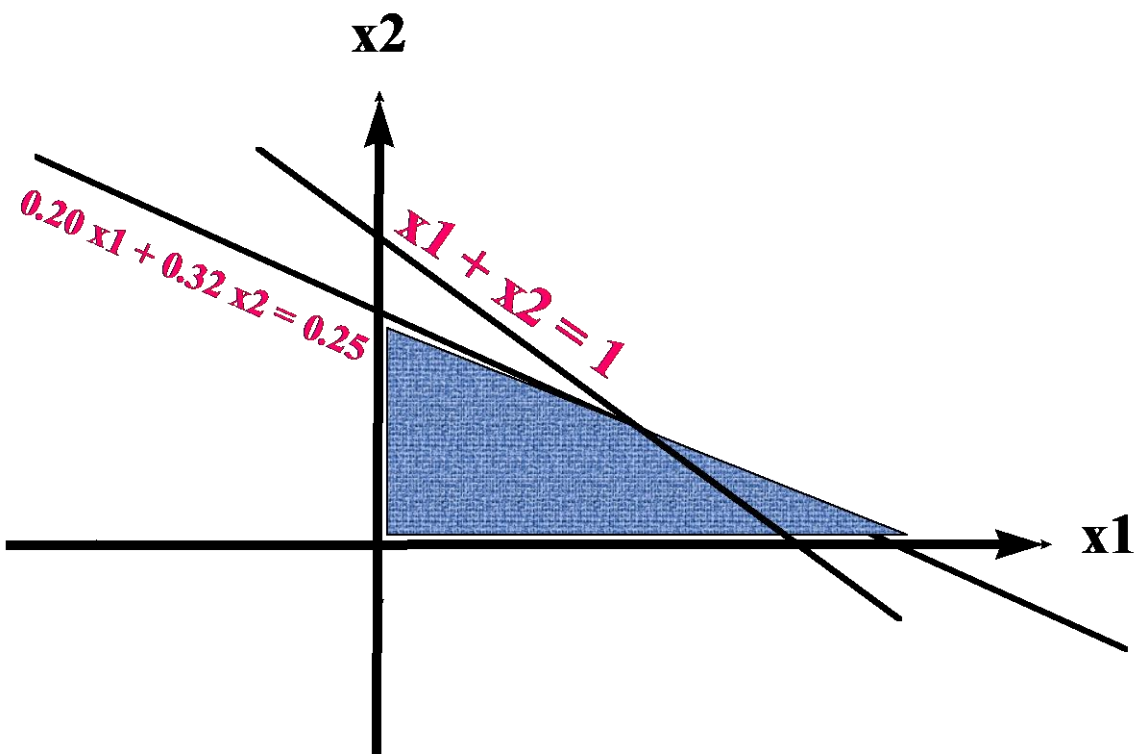

Feasibility

Any vector (or point) which satisfies all the constraints of the optimization program is called a feasible vector (or a feasible point)

The set of all feasible points is called feasibility region or feasibility domain

Any optimal solution must lie within the feasibility region!

SOLUTION EXAMPLE 2: GRAPHICAL SOLUTION

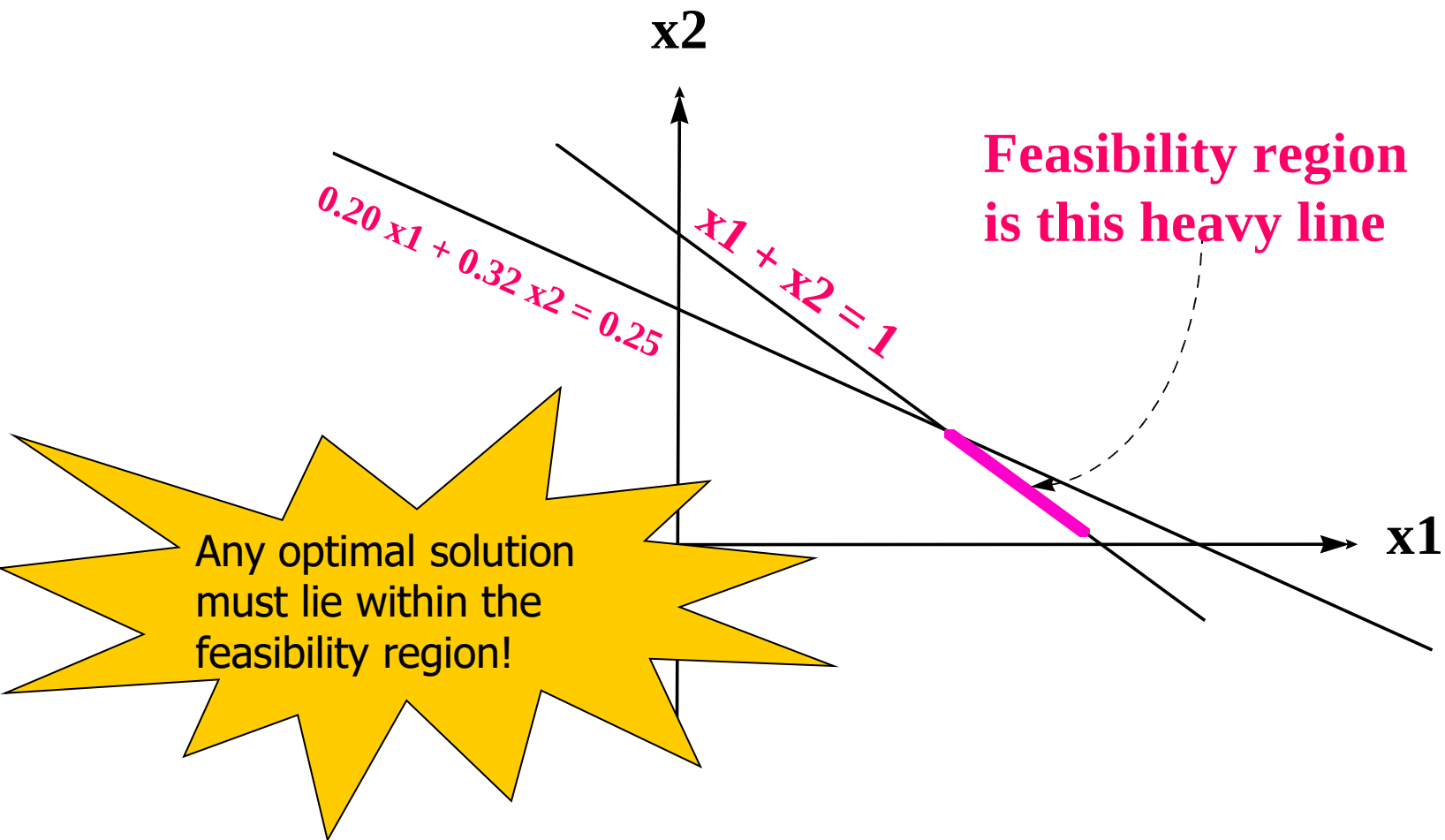

SOLUTION EXAMPLE 2: GRAPHICAL SOLUTION

By plotting objective function curves for arbitrary values of z (here 70 and 75) we can evaluate the results

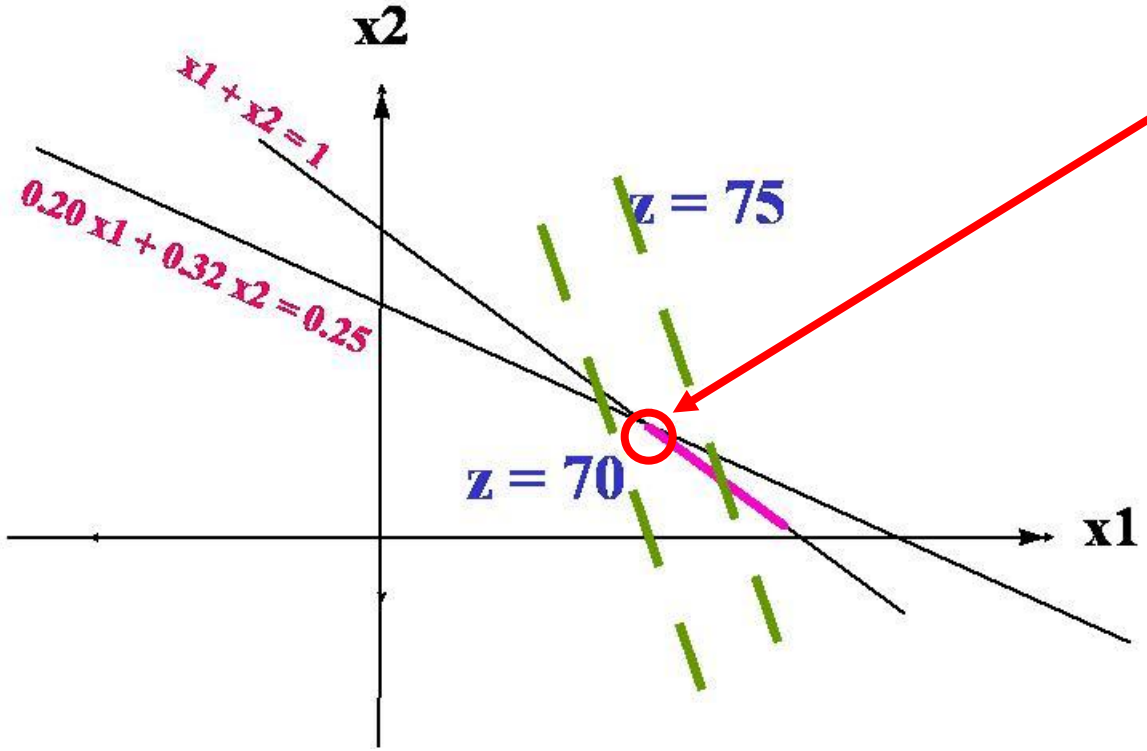

Optimal Point

Intersection between

$x1 + x2 = 1$

and

$0.20x1 + 0.32x2 = 0.25$

In addition

$70 < z_{min} < 75$

SOLUTION EXAMPLE 2: GRAPHICAL SOLUTION

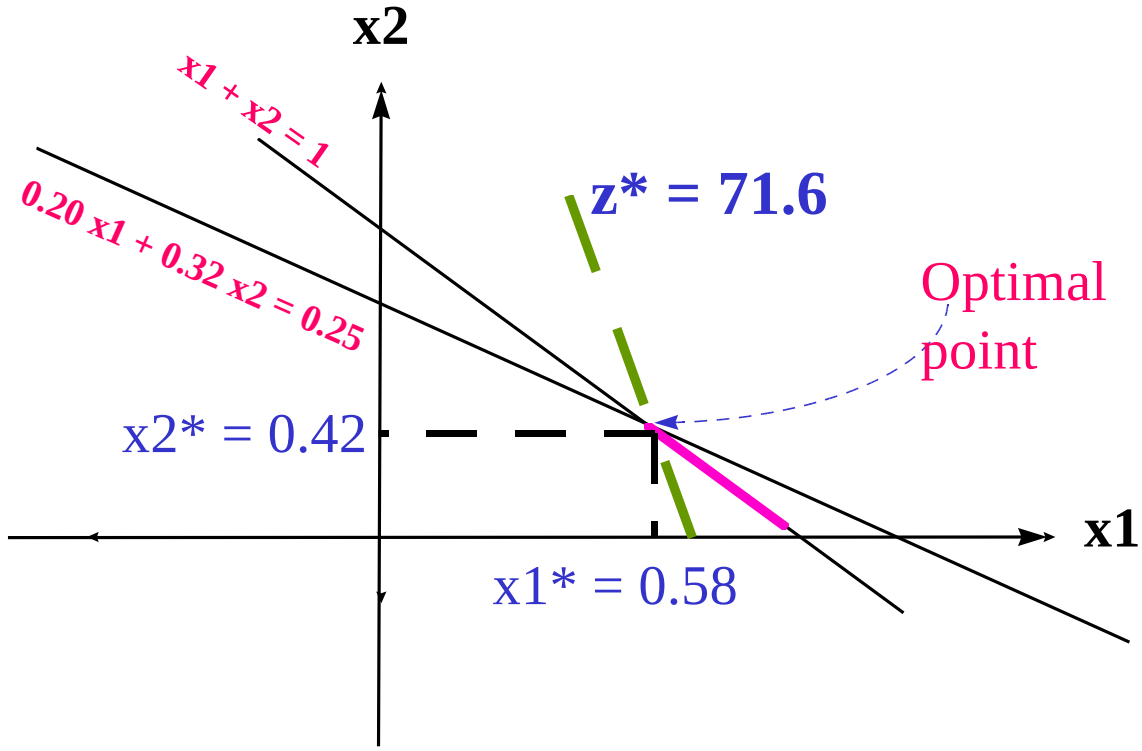

gamside: C:\Users\User\Documents\gamsdir\projdir\gmsproj.gpr - [C:\Users\User\Documents\gamsdir\projdir\Untitled_1.g...

File Edit Search Windows Utilities Model Libraries Help

Untitled_1.gms Untitled_1.lst

```
scalar cost1 cost of solution 1 in cents per kg /80 /;
scalar cost2 cost of solution 2 in cents per kg /60/;

variable
cost cost production 1kg of MEA solution in cents per kg ;

positive variable
x1 quantity of grade 1 in kg
x2 quantity of grade 2 in kg ;

equations

eq1 objective function
eq2 water content
eq3 overall mass balance;

eq1.. cost =e= cost1*x1 + cost2*x2;
eq2.. 0.20*x1 + 0.32*x2 =l= 0.25;
eq3.. x1 + x2 =e= 1;

model MEA /all/;

solve MEA using lp minimizing cost;
```

19: 18 Insert

12:21 PM
18/7/2011

gamside: C:\Users\User\Documents\gamsdir\projdir\gmsproj.gpr - [C:\Users\User\Documents\gamsdir\projdir\Untitled_1.lst]

File Edit Search Windows Utilities Model Libraries Help

Untitled_1.gms | Untitled_1.lst

- Compilation
- Equation Listing SOLVE MEAU
- Equation
- Column Listing SOLVE MEAU
- Column
- Model Statistics SOLVE MEAU
- Solution Report SOLVE MEAU
- SolEQU
- SolVAR

```
---- EQU eq1              .          .          .          1.000
---- EQU eq2           -INF      0.250      0.250       -166.667
---- EQU eq3           1.000      1.000      1.000        113.333

  eq1  objective function
  eq2  water content
  eq3  overall mass balance

                       LOWER      LEVEL      UPPER     MARGINAL

---- VAR cost          -INF     71.667      +INF          .
---- VAR x1              .       0.583      +INF          .
---- VAR x2              .       0.417      +INF          .

  cost  cost production 1kg of MEA solution in cents per kg
  x1  quantity of grade 1 in kg
  x2  quantity of grade 2 in kg


**** REPORT SUMMARY :        0     NONOPT
                             0 INFEASIBLE
```

160: 1

12:20 PM
18/7/2011

SOLUTION TERMINOLOGY

- **Feasible solution**: a solution that satisfies the constraints.
- **Infeasible solution**: a solution that violates one of the constraints
- **Feasible region**: set of all feasible solutions.
- **Optimal solution**: a feasible solution that optimizes the objective function.
- **Multiple optimal solutions**: infinitely many solutions
- **Infeasible problem**: a problem that has no feasible solution
- **Corner-point feasible (CPF) solution, vertex, extreme point:** a solution that lies at a corner of the feasible region.

Example 3 : TWO CRUDE PETROLEUM

After 18 month performed the feasibility study, Petronas, agreed to construct and operate the Terengganu refinery. The refinery distills crude petroleum from two sources, Indonesia and Thailand, into three main products: gasoline, jet fuel, and lubricants. The two crudes differ in chemical composition and thus yield different product mixes. Each barrel of Indonesia crude yield 0.3 barrel of gasoline, 0.4 barrel of jet fuel, and 0.2 barrel of lubricants. On the other hand, each barrel of Thailand crude yields 0.4 barrel of gasoline but only 0.2 barrel of jet fuel and 0.3 barrel of lubricants. The remaining 10% of each barrel is lost to refining. The crudes also differ in cost and availability. Terengganu Refinery can purchase up to 9000 barrels per day from Indonesia at $20 per barrel. Up to 6000 barrels per day of Thailand petroleum are also available at the lower cost of $15 per barrel because of the shorter transportation distance. Terengganu Refinery's contracts with independent distributors require it to produce 2000 barrels per day of gasoline, 1500 barrels per day of jet fuel, and 500 barrels per day of lubricants.

Formulate the optimization problem.

Example 3 : TWO CRUDE PETROLEUM

	Indonesia crude	Thailand crude	Demand (barrel/day)
Gasoline	0.3	0.4	2000
Jet Fuel	0.4	0.2	1500
Lubricants	0.2	0.3	500
Losses to refinery	0.1	0.1	
supply (barrel/day)	9000	6000	
cost ($/barrel)	20	15	

SOLUTION FOR EX. 3

Step 1 : Define the decision variables

x_1: barrels of Indonesia crude refined per day (in thousands)
x_2: barrels of Thailand crude refined per day (in thousands)

Step 2 : Define the objective function

min $20x_1 + 15x_2$ (total cost)

Step 3: Define equality & inequality constraint

$0.3x_1 + 0.4x_2 \geq 2.0$ (gasoline requirement)

$0.4x_1 + 0.2x_2 \geq 1.5$ (jet fuel requirement)

$0.2x_1 + 0.3x_2 \geq 0.5$ lubricant requirement)

$x_1 \leq 9$ (Indonesia availability)

$x_2 \leq 6$ (Thailand availability)

$x_1, x_2 \leq 0$ (non-negativity)

MODEL FORMULATION

The standard statement of an optimization model has the form

min or max	*(objective function(s))*
s.t	*(main coinstraints)*
	(variable-type constraints)

where "s.t." stands for "subject to".

min	$20x_1 + 15x_2$	(total cost)
s.t	$0.3x_1 + 0.4x_2 \geq 2.0$	(gasoline requirement)
	$0.4x_1 + 0.2x_2 \geq 1.5$	(jet fuel requirement)
	$0.2x_1 + 0.3x_2 \geq 0.5$	lubricant requirement)
	$x_1 \leq 9$	(Indonesia availability)
	$x_2 \leq 6$	(Thailand availability)
	$x_1, x_2 \leq 0$	(non-negativity)

EXAMPLE 4: CRUDE BLENDING

Suppose 3 crudes (light naphtha, medium naphtha, heavy naphtha) in a refinery are to be blended to produce gasoline oil. The octane number of the fuel must be at least 95. The octane number for the 3 crudes are shown in the table

	Amount blended (barrels/day)	Octane number
Light naphtha	q1	92
Medium naphtha	q2	84
Heavy naphtha	q3	97

- *Formulate the mathematical model assuming a linear mixing rule and find the optimal blending ratio that satisfy the targeted property e.g. Octane No*

SOLUTION FOR EXAMPLE 4

Step 1 : Define the decision variables

q_1 = *amount of light naphtha (barrel/day)*

q_2 = *amount of medium naphtha (barrel/day)*

q_3 = *amount of heavy naphtha (barrel/day)*

Step 2 : Define the objective function

????

Step 3: Define equality & inequality constraint

Mass balance :

$$q_4 = q_1 + q_2 + q_3$$

Property target :

$$\frac{q_1}{q_1+q_2+q_3}(92)+\frac{q_2}{q_1+q_2+q_3}(86)+\frac{q_3}{q_1+q_2+q_3}(97)\geq 95$$

EXAMPLE 4: CRUDE BLENDING (con't)

	Amount blended (barrels/day)	Octane number	SULPHUR CONTENT (%)
Light naphtha	q1	92	2
Medium naphtha	q2	84	0.8
Heavy naphtha	q3	97	0.5

The crude oil blends to form gasoline must contain at most 1% sulfur.
How do you formulate this problem

SOLUTION FOR EXAMPLE 4

Step 1 : Define the decision variables

q_1 = *amount of light naphtha (barrel/day)*

q_2 = *amount of medium naphtha (barrel/day)*

q_3 = *amount of heavy naphtha (barrel/day)*

Step 2 : Define the objective function

????

Step 3: Define equality & inequality constraint

Mass balance : $q_4 = q_1 + q_2 + q_3$

Octane No. $$\frac{q_1}{q_1+q_2+q_3}(92)+\frac{q_2}{q_1+q_2+q_3}(86)+\frac{q_3}{q_1+q_2+q_3}(97)\geq 95$$

Sulphur $$\frac{q_1}{q_1+q_2+q_3}(2)+\frac{q_2}{q_1+q_2+q_3}(0.8)+\frac{q_3}{q_1+q_2+q_3}(0.5)\leq 1$$

EXAMPLE 5:
MUNICIPAL POWER GENERATION

Putrajaya Municipal Power would like to determine optimal operating levels for their electric generators and associated distribution patterns that will satisfy customer demand. Consider the following prototype system.

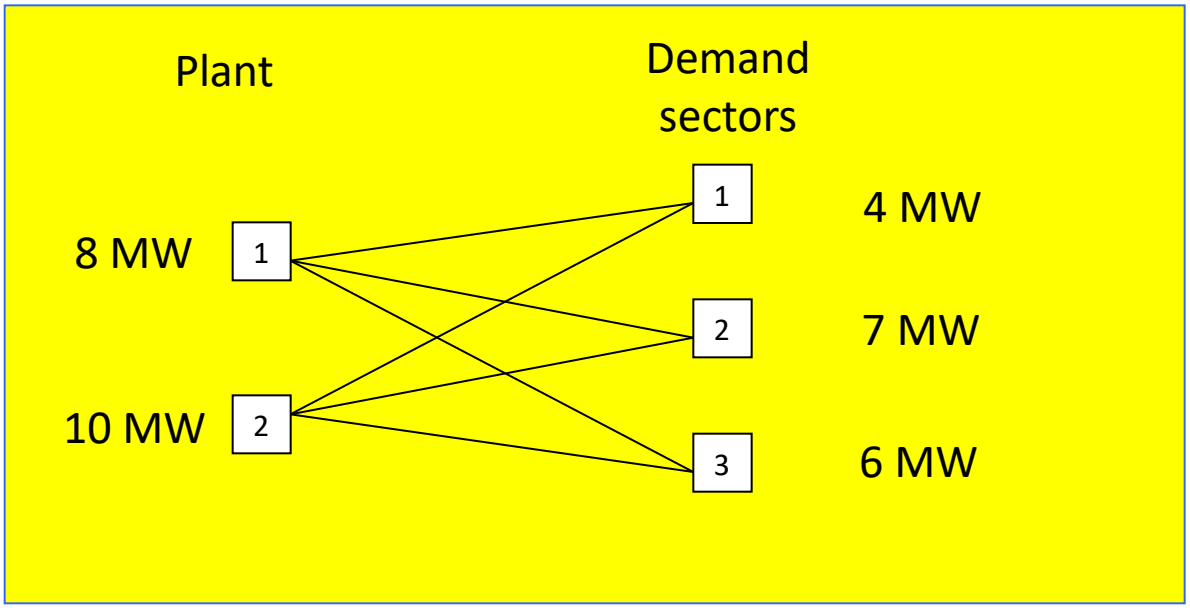

Formulate the problem and determine the optimal distribution

EXAMPLE 5 (con't): MUNICIPAL POWER GENERATION

	Cost, C_{ij} ($/MWh)			
From	SECTOR 1 j=1	SECTOR 2 j=2	SECTOR 3 j=3	SUPPLY (MWh)
Plant 1 i=1	10	15	18	8
Plant 2 i=2	8	12	13	10
DEMAND (MWh)	4	7	6	

S_i = supply from ith plant
d_i = demand required by jth city
C_{ij}= cost to supply from ith to demand jth

SOLUTION FOR EXAMPLE 5: MUNICIPAL POWER GENERATION (1/3)

STEP 1: Define decision variables

x_{11} = power supply from plant 1 to demand sector 1

x_{12} = power supply from plant 1 to demand sector 2

x_{13} = power supply from plant 1 to demand sector 3

x_{21} = power supply from plant 2 to demand sector 1

x_{22} = power supply from plant 2 to demand sector 2

x_{23} = power supply from plant 2 to demand sector 3

STEP 2: Define objective function

$$\text{Min } Z = 10\,x_{11} + 15x_{12} + 18\,x_{13} + 8\,x_{21} + 12x_{22} + 13x_{23}$$

SOLUTION FOR EXAMPLE 5: MUNICIPAL POWER GENERATION (2/3)

STEP 3: Define the constraints

- Demand requirement for each sector

$x_{11} + x_{21} \geq 4$ Demand for sector 1

$x_{12} + x_{22} \geq 7$ Demand for sector 2

$x_{13} + x_{33} \geq 6$ Demand for sector 3

- Supply balance

$x_{11} + x_{12} + x_{13} \leq 8$ Power supply from plant 1

$x_{21} + x_{22} + x_{23} \leq 10$ Power supply from plant 2

- Nonlinearity constraints

$$x_{11}, x_{12}, x_{13}, x_{21}, x_{22}, x_{32} \geq 0$$

SOLUTION FOR EXAMPLE 5: MUNICIPAL POWER GENERATION (3/3)

Complete LP formulation

Min Z = 10 x_{11} + 15x_{12} + 18 x_{13} + 8 x_{21}
+ 12x_{22} + 13x_{23}

Subject to

$$\left.\begin{array}{l} x_{11} + x_{21} \geq 4 \\ x_{12} + x_{22} \geq 7 \\ x_{13} + x_{33} \geq 6 \end{array}\right\}$$

$$\left.\begin{array}{l} x_{11} + x_{12} + x_{13} \leq 8 \\ x_{21} + x_{22} + x_{23} \leq 10 \end{array}\right\}$$

$$x_{11}, x_{12}, x_{13}, x_{21}, x_{22}, x_{32} \geq 0$$

$$\min Z = \sum_i \sum_j C_{ij} x_{ij}$$

Subject to

$$\sum_i x_{ij} \geq d_j$$

$$\sum_j x_{ij} \leq S_i$$

$x_{ij} \geq 0$

EXAMPLE 5:
SIMPLIFICATION OF MODEL FORMULATION

Define SET

i = set of supply points

j = set of demand points

STEP 1: Define decision variables

x_{ij} = power (kWh) to be supplied from *ith* plant to demand for city *jth*

STEP 2: Define the objective function

Min cost of power distribution, Z = $\sum_i \sum_j C_{ij} x_{ij}$

STEP 3: Define constraints

$$\sum_j x_{ij} \le S_i \qquad \forall i \qquad \text{(supply)}$$

$$\sum_i x_{ij} \ge d_j \qquad \forall j \qquad \text{(demand requirement)}$$

$$x_{ij} \ge 0 \qquad \text{Non negativity constraints}$$

WORKING SESSION: GASOLINE BLENDING

Petronas Terengganu Sdn. Bhd (PTSB) manufactures three types of gasoline (gasoline1, gasoline 2, gasoline 3). Each type is produced by blending three types of crude oil (crude1, crude2, crude3). The sales prices per barrel of gasoline are as follows:

	Sales price per Barrel		Purchase Price per Barrel
Gasoline 1	**$70**	**Crude 1**	**$45**
Gasoline 2	**$60**	**Crude 2**	**$35**
Gasoline 3	**$50**	**Crude 3**	**$25**

WORKING SESSION: GASOLINE BLENDING (con't)

- The three types of gasoline differ in their octane rating and sulfur content. The crude oil blends specification,
  - gasoline 1 must have an average octane no. of at least 100 and contain at most 1% sulfur.
  - gasoline 2 must have an average octane no. of at least 80 and contain at most 2% sulfur.
  - gasoline 3 must have an average octane no. of at least 60 and contain at most 1% sulfur.

  The octane no. and the sulfur content of the three types of oil are:

	Octane No.	Sulfur Content
Crude 1	**120**	**0.5%**
Crude 2	**60**	**2.0%**
Crude 3	**80**	**3.0%**

WORKING SESSION: GASOLINE BLENDING (con't)

PTSB can purchase up to 5000 barrels of each type of crude oil and PTSB's customers require the following amounts of each gasoline:

gasoline 1- 3000 barrels/day,
gasoline 2- 2000 barrels/day
gasoline 3- 1000 barrels/day.

The company considers it an obligation to meet these demands.

Assume, the property model for the mixture follows simple mixing rule, formulate the optimization problem.

WORKING SESSION 1: GASOLINE BLENDING (con't)

i	Supply Barrel/d	Oc. No	S %	Cost $/barrel
Crude 1	5000	120	2	45
Crude 2	5000	60	0.8	35
Crude 3	5000	80	0.5	25

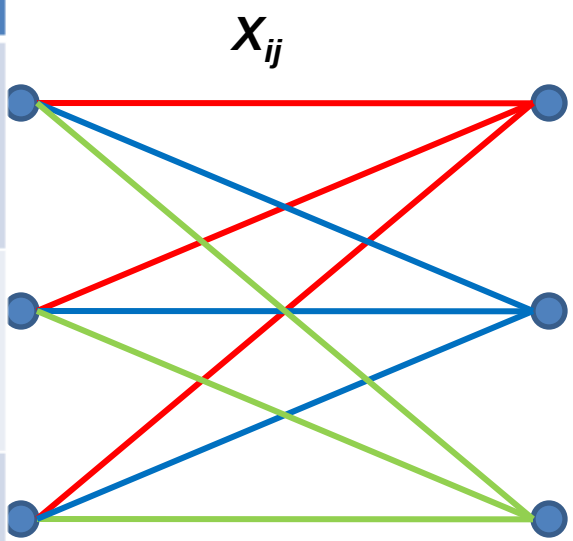

j	Demand Barrel/d	Oc. No	S %	Sale $/barrel
Gas 1	3000	>100	<1	70
Gas 2	2000	> 80	<2	60
Gas 3	1000	> 60	<1	50

SOLUTION FOR WS1 (1/2)

Define SET

i = set of crude supply

j = set of gasoline demand

STEP 1: Define decision variables

x_{ij} = barrel of crude oil i used daily to produce gasoline j

STEP 2: Define the objective function

Profit = Sales – raw material cost

Max profit, Z = $\sum_j S_j d_j - \sum_i \sum_j C_{ij} x_{ij}$

SOLUTION FOR WS1 (2/2)

STEP 3: Define constraints

$$\sum_j x_{ij} \le S_i$$ $\forall$i (supply)

$$\sum_i d_j \ge demand$$ $\forall$j (demand)

$$\frac{S_i}{\sum_i S_i} ON_i \ge ON_{target}$$ (Octane No.)

$$\frac{S_i}{\sum_i S_i} sulphur_i \ge Sulphur_{target}$$ (Sulphur content)

$x_{ij} \ge 0$ Non negativity constraints

SUPERSTRUCTURE
&
FORMULATION

EXAMPLE 5: WATER MANAGEMENT

1) Water balance for each source

$$WW_i + \sum_j F_{i,j} + \sum_r F_{i,r} = S_i$$

Demand Balance

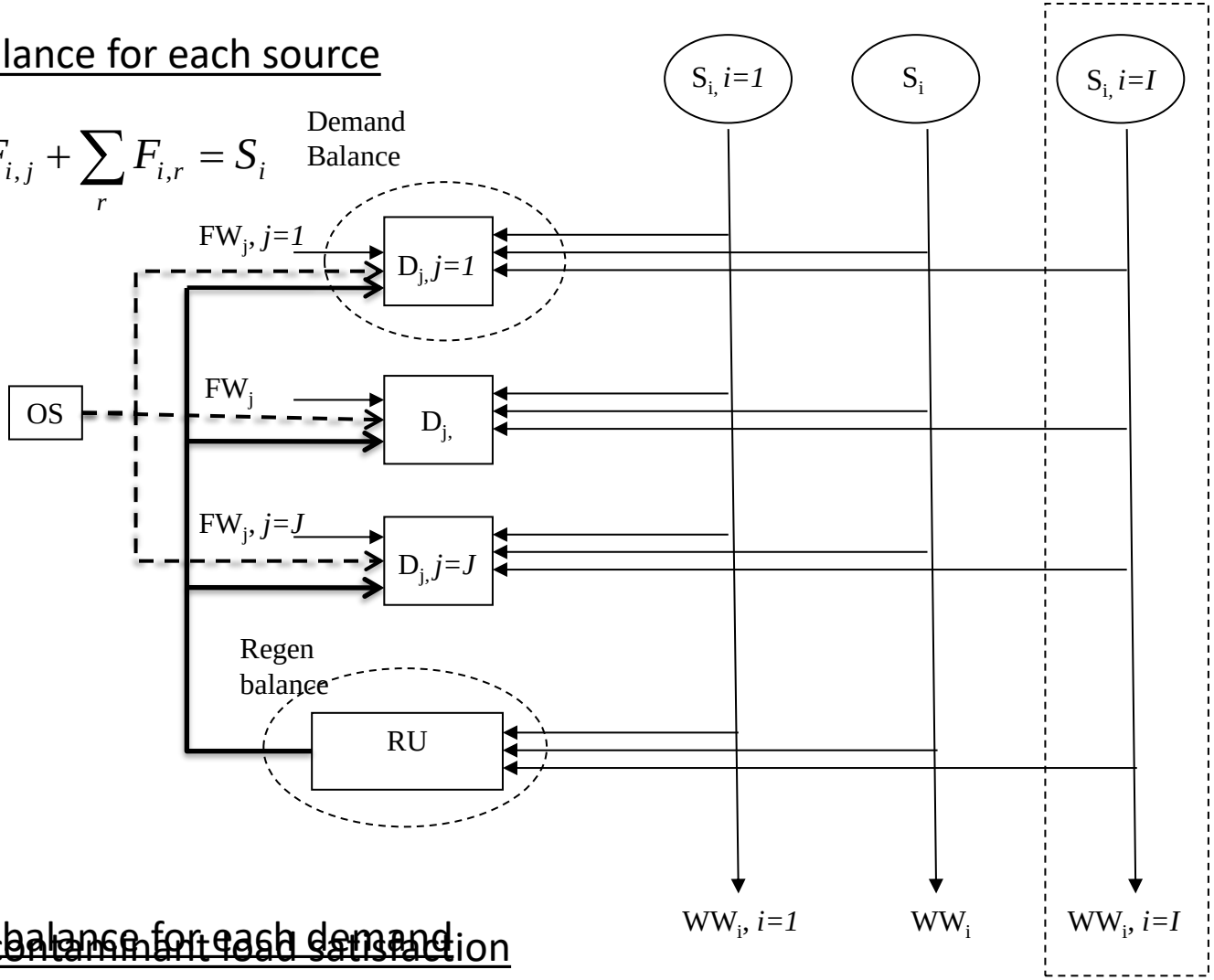

2) Water balance for each demand

$$FW_j + \sum_i F_{i,j} + \sum_{os} F_{os,j} + \sum_r F_{r,j} = D_j$$

3) Demand contaminant load satisfaction

$$FW_j Cw_j + \sum_i F_{i,j} Cs_{i,k}^{\max} + \sum_{os} Fos_{os,j} Cos_{os,k} + \sum_r F_{r,j} Cro_{r,k} \le B_j Cd_{j,k}^{\max}$$

Source Balance

PROBLEM FORMULATION

1) Water balance for each source

$$WW_i + \sum_j F_{i,j} + \sum_r F_{i,r} = S_i$$

2) Water balance for each demand

$$FW_j + \sum_i F_{i,j} + \sum_{os} Fos_{os,j} + \sum_r F_{r,j} = D_j$$

3) Demand contaminant load satisfaction

$$FW_j Cw_k + \sum_i F_{i,j} Cs_{i,k}^{\max} + \sum_{os} Fos_{os,j} Cos_{os,k} + \sum_r F_{r,j} Cro_{r,k} \leq B_j Cd_{j,k}^{\max}$$

EXAMPLE 5: WATER MANAGEMENT (con't)

Demand required same concentration, e.g. 10 ppm

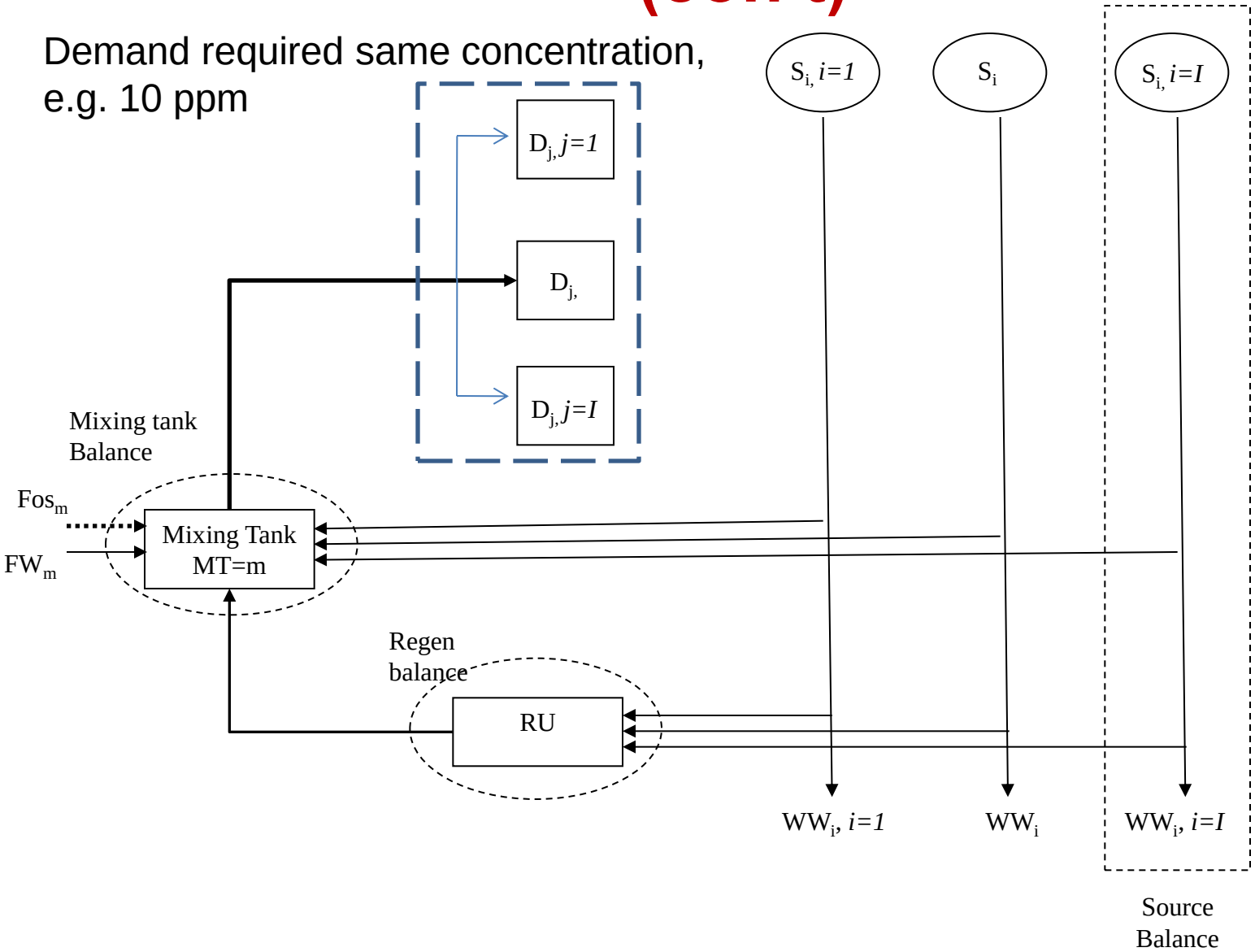

PROBLEM FORMULATION

1) Water balance for each source

$$WW_i + F_{i,m} + F_{i,r} = S_i$$

2) Mixing Tank balance

$$FW_m + \sum_i F_{i,m} + Fosmax_{os,m} + F_{r,m} = \sum_j F_{m,j}$$

2) Water balance for each demand

$$F_{m,j} = D_j$$

3) contaminant load satisfaction for mixing tank/demand

$$FW_m Cw_k + \sum_i F_{i,m} Cs_{i,k}^{\max} + Fosmax_{os,m} Cos_{os,k} + F_{r,m} Cro_k \leq \sum_j F_{m,j} C_{m,k}$$